PROTERIAL

H93TX1

Reinforded Insulation
Power line Communication Coupling
Transformer For CENELEC A,B、FCC,ARIB.

MECHANICAL DIMENSIONS

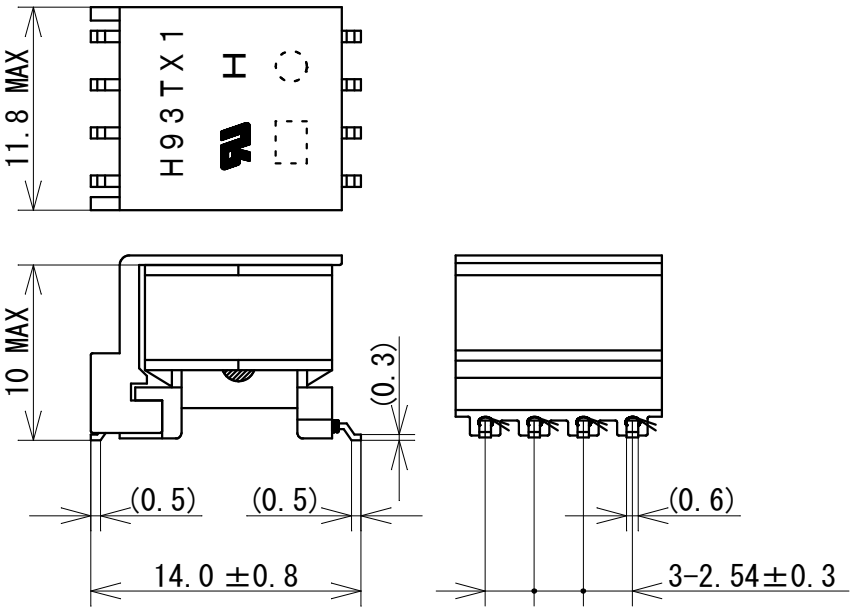

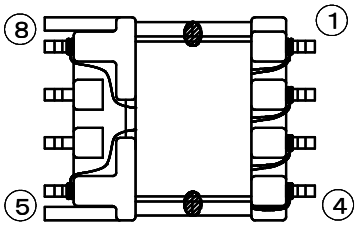

UNIT : mm

SCHEMATIC

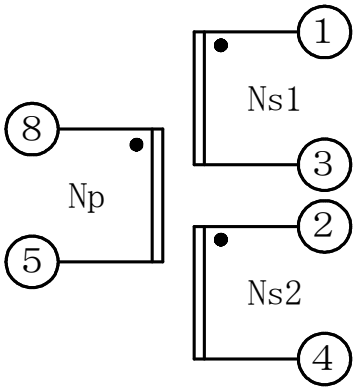

Turns Ratio
Np : Ns1+Ns2 = 1 : 1

UL File No. : E117865
Creepage distance : 5.2mm
(4.0mm-Insulation meterial group Ⅰ)
Working Voltage Urms = 240V
Overvoltage category : Ⅲ
Pollution degree : Ⅱ
Insulation material group : Ⅰ, Ⅲb

※Precautions for use
For transformers that have been manufactured for more than 6 months, please check the solder wettability of the terminals before use.

ELECTRICAL SPECIFICATIONS

Parameter	Pins Under Test	Test Conditions	STD TOLERANCE
Breakdown Voltage	1 : 8	Vac 3600Vrms 2sec	
Inductance	8 – 5	10kHz 0.1V	≧600μH
Leakage Inductance	8 – 5 (1-3,2-4 SHORT)	1MHz 0.1V	≦1.0μH
Interwinding Capacitance	1 – 8 (2-3 SHORT)	10kHz 0.1V	≦40pF
DC Resistance	1 – 4 (2-3 SHORT)	T = 25℃	≦0.32Ω
	8 – 5		≦0.40Ω